REVISIONS				
ZONE	REV	DESCRIPTION	DATE	APPROVED

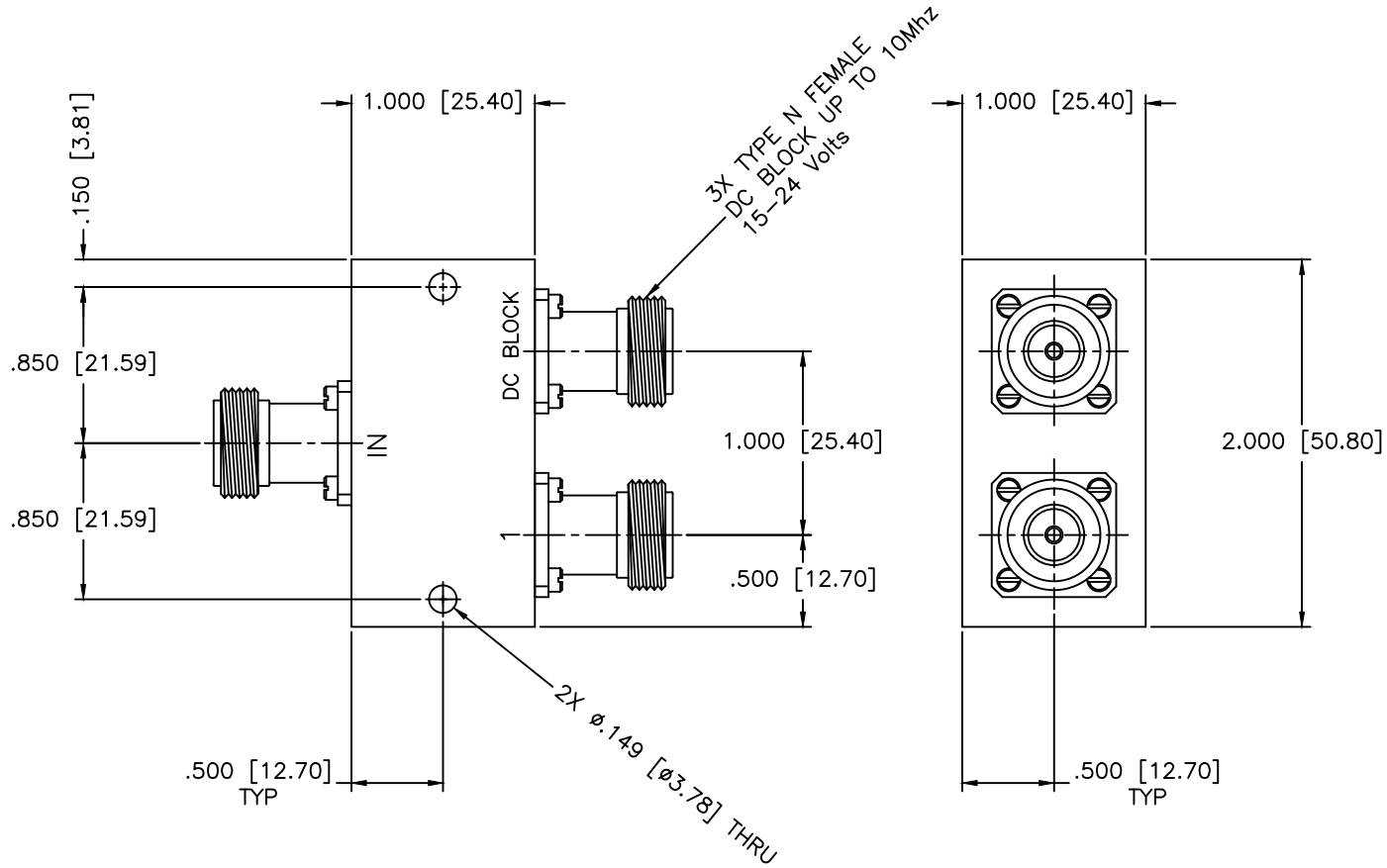

SPECIFICATIONS

Frequency Range:	950–2000 MHz
Insertion Loss:	0.35dB Max.
Isolation:	18dB Min.
VSWR IN/OUT:	1.35:1/1.20:1 Max.
Amplitude Balance:	±0.2dB Max.
Phase Balance:	±3 Deg. Max.
Power:	30W (Load Vswr@1.2)

MATERIAL:

MCLI

MICROWAVE COMMUNICATIONS LABORATORIES INC.
7255 30TH AVE. N. SAINT PETERSBURG, FL 33710
TEL: (727) 344-6254 FAX: (727) 381-6116
hhtp://WWW.MCLI.COM

SCALE: N/A
SHEET: N/A

UNLESS OTHERWISE SPECIFIED:
TOLERANCES
IN (INCHES) OR [mm] (MILLIMETERS)
FRACTIONS: ± 1/64
DECIMALS: ±.01 ±.005
ANGLE: ±1/2°

DRAWING TITLE: 2-WAY POWER DIVIDER

PART NO. PS2-158/NF/DC

DRAWN: Paiboon Luekhamhan DATE: 12-11-2001

APPROVED: T. Nguyen DATE: 12-11-2001

PROPRIETARY NOTICE:
THE INFORMATION IN THIS DRAWING IS PROPRIETARY AND SHALL NOT BE USED OR DISCLOSED WITHOUT WRITTEN PERMISSION FROM MICROWAVE COMMUNICATIONS LABORATORIES INC. (MCLI)

THIRD ANGLE PROJECTION

CAGE CODE: 0D2L5
SIZE: A
REV: N/A
DO NOT SCALE THE DRAWING
DWG NO. 83989