REVISIONS				
ZONE	REV	DESCRIPTION	DATE	APPROVED

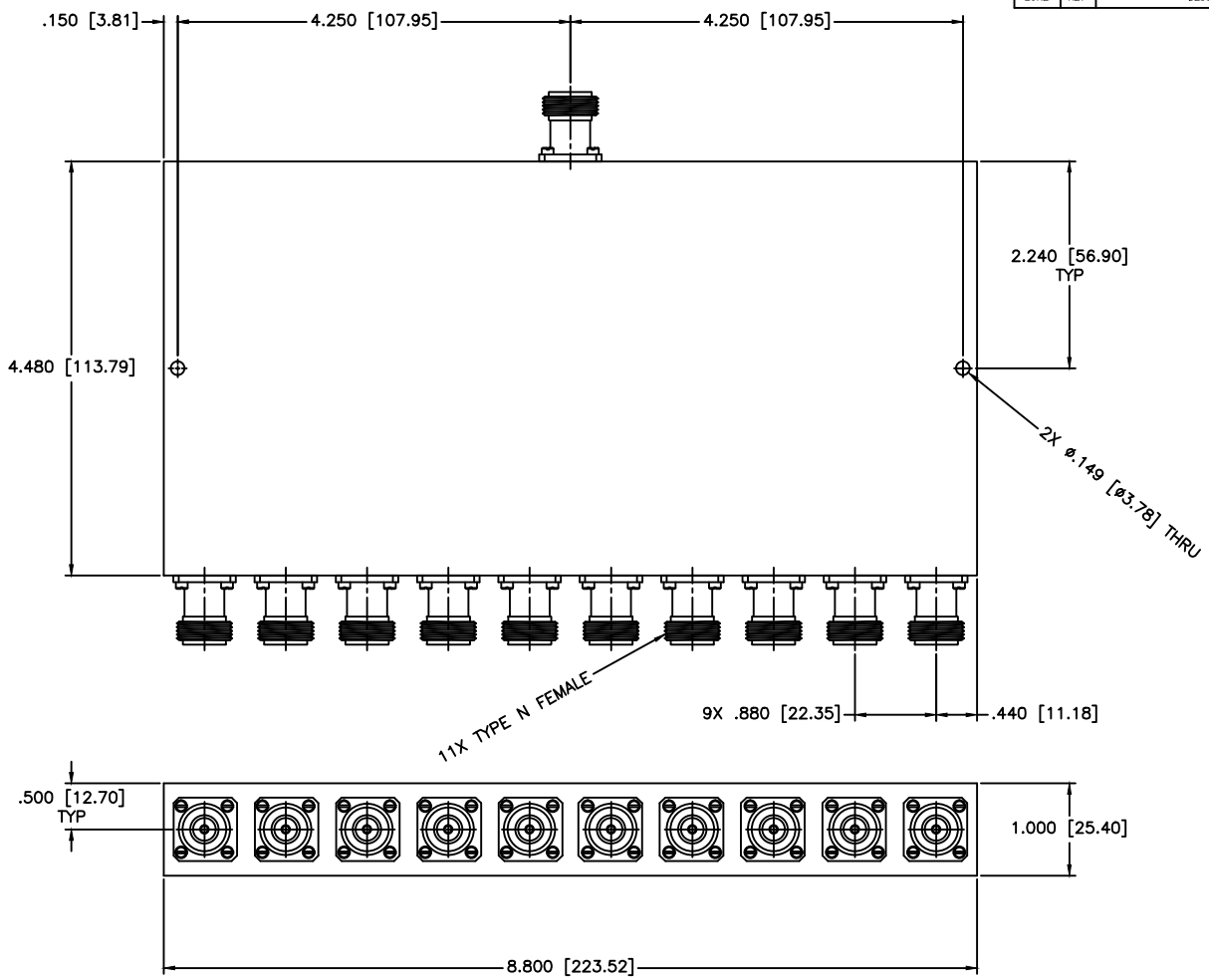

SPECIFICATIONS

Frequency Range: 1–3 GHz

Insertion Loss: 2.5dB Max.

Isolation: 17dB Min.

VSWR Input/Output: 1.60:1/1.60:1 Max.

Amplitude Balance: ±1.5dB Max.

Input Power: 10 Watts (Load vswr @ 1.2)

MATERIAL:

DRAWN: Paiboon Luekhamhan DATE: 06-04-2019

APPROVED: T. Nguyen DATE: 06-04-2019

MCLI

MICROWAVE COMMUNICATIONS LABORATORIES INC.
7255 30TH AVE. N. SAINT PETERSBURG, FL 33710
TEL: (727) 344-6254 FAX: (727) 381-6116
hhtp://WWW.MCLI.COM

UNLESS OTHERWISE SPECIFIED:
TOLERANCES
IN (INCHES) OR [mm] (MILLIMETERS)
FRACTIONS: ± 1/64
DECIMALS: ±.01 ±.005
ANGLE: ±1/2°

PROPRIETARY NOTICE:
THE INFORMATION IN THIS DRAWING IS PROPRIETARY AND SHALL NOT BE USED OR DISCLOSED WITHOUT WRITTEN PERMISSION FROM MICROWAVE COMMUNICATIONS LABORATORIES INC. (MCLI)

THIRD ANGLE PROJECTION

SCALE: N/A

SHEET: N/A

DRAWING TITLE: 10-WAY POWER DIVIDER

PART NO. PS10-31/NF

CAGE CODE: 0D2L5

SIZE: C REV: N/A

DO NOT SCALE THE DRAWING

DWG NO. 86810