REVISIONS				
ZONE	REV	DESCRIPTION	DATE	APPROVED

MECHANICAL

CONTACT: BREAK BEFORE MAKE
ACTUATOR: LATCHING
SWITCHING SPEED: 20 mSEC MAX

ELECTRICAL

ACTUATOR VOLTAGE: 12.0 Vdc
ACTUATOR CURRENT: 110 mA MAX @ 12.0 Vdc
POWER HANDLING: 200W CW @ 1.0 GHz

ENVIRONMENTAL

OPERATING TEMP: −54° C TO +90° C
SINE VIBRATION: 30 G'S rms
LIFE: 1,000,000 CYCLES
RANDOM VIBRATION: 20 G'S rms

SCHEMATIC, LATCHING

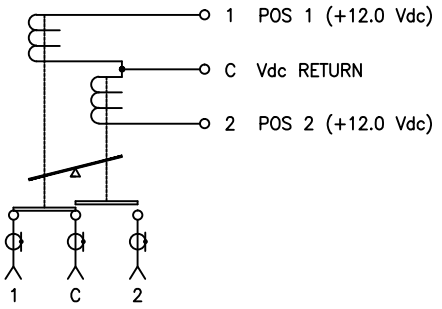

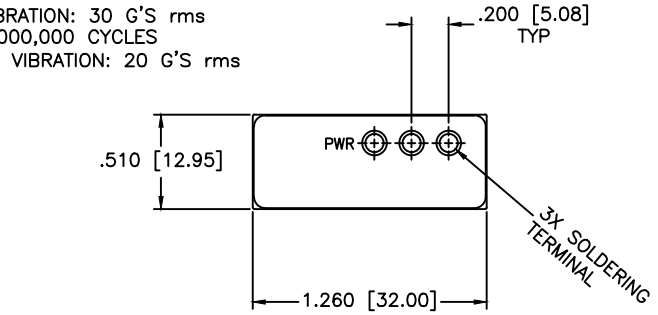

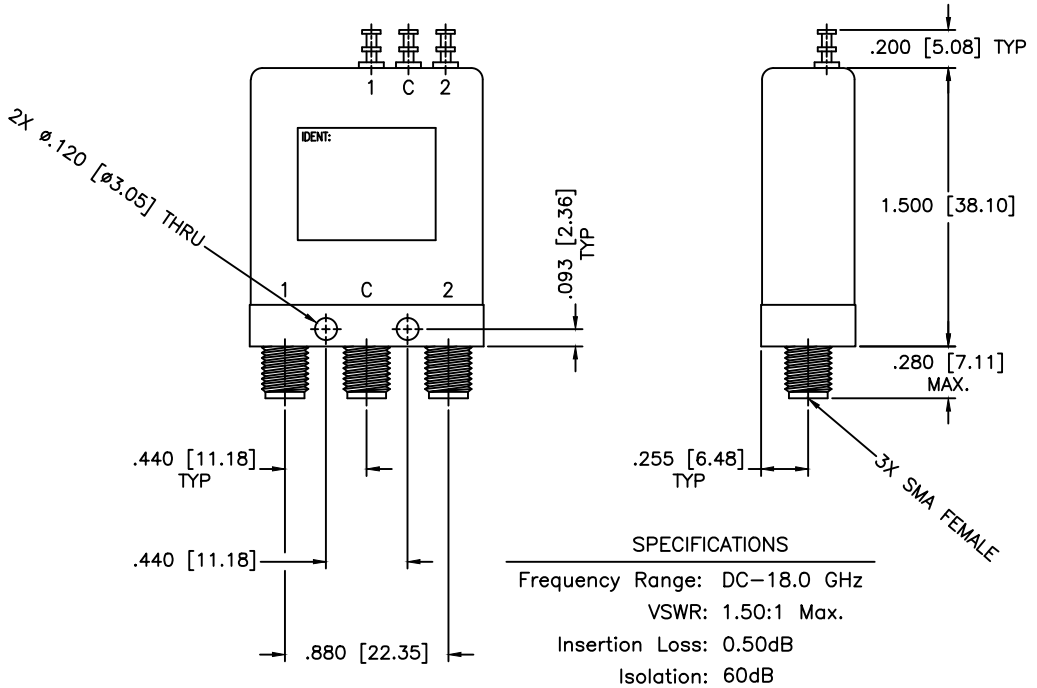

SPECIFICATIONS

Frequency Range:	DC−18.0 GHz
VSWR:	1.50:1 Max.
Insertion Loss:	0.50dB
Isolation:	60dB
Impedance:	50 Ohms

MATERIAL:	MCLI — MICROWAVE COMMUNICATIONS LABORATORIES INC. 7255 30TH AVE. N. SAINT PETERSBURG, FL 33710 TEL: (727) 344-6254 FAX: (727) 381-6116 hhtp://WWW.MCLI.COM	SCALE: N/A	SHEET: N/A
	UNLESS OTHERWISE SPECIFIED: TOLERANCES IN (INCHES) OR [mm] (MILLIMETERS) FRACTIONS: ± 1/64 DECIMALS: ±.02 ±.009 ANGLE: ±1/2°	DRAWING TITLE: COAXIAL RF SWITCHES	
		PART NO. K2-7-L/12	
DRAWN: Paiboon Luekhamhan	DATE: 02-26-2007	PROPRIETARY NOTICE: THE INFORMATION IN THIS DRAWING IS PROPRIETARY AND SHALL NOT BE USED OR DISCLOSED WITHOUT WRITTEN PERMISSION FROM MICROWAVE COMMUNICATIONS LABORATORIES INC. (MCLI)	
APPROVED: T. Nguyen	DATE: 02-26-2007	THIRD ANGLE PROJECTION	CAGE CODE: 0D2L5 / SIZE: A / REV: N/A / DO NOT SCALE THE DRAWING / DWG NO. 82786