REVISIONS				
ZONE	REV	DESCRIPTION	DATE	APPROVED

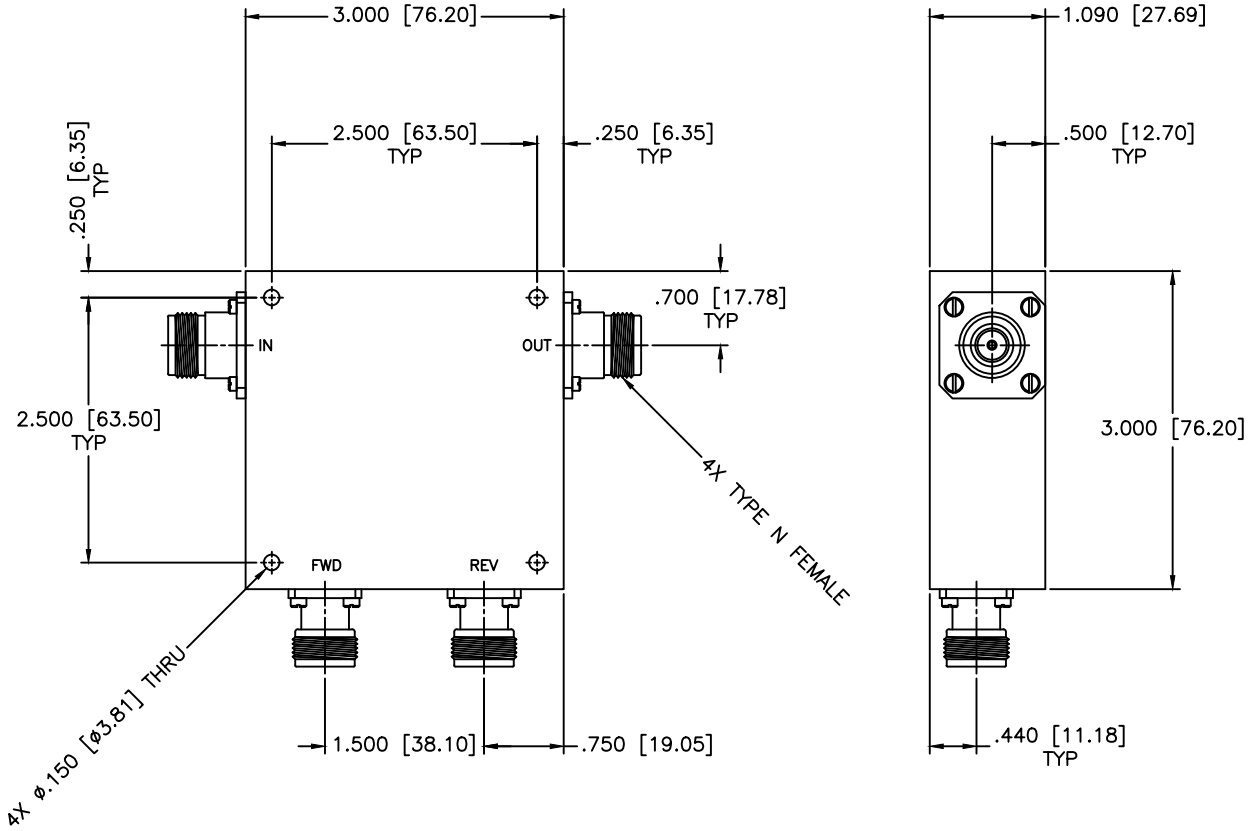

SPECIFICATIONS

FREQUENCY RANGE:	500–1000 MHz
COUPLING:	30±1.0dB Nom.
FLATNESS:	±0.25dB
INSERTION LOSS:	0.20dB Max.
DIRECTIVITY:	20dB Min.
VSWR PRIME LINE:	1.15:1 Max.
POWER:	1,000W CW

MATERIAL:

DRAWN: Paiboon Luekhamhan DATE: 01-06-2011

APPROVED: T. Nguyen DATE: 01-06-2011

MCLI

MICROWAVE COMMUNICATIONS LABORATORIES INC.
7255 30TH AVE. N. SAINT PETERSBURG, FL 33710
TEL: (727) 344-6254 FAX: (727) 381-6116
hhtp://WWW.MCLI.COM

UNLESS OTHERWISE SPECIFIED:
TOLERANCES
IN (INCHES) OR [mm] (MILLIMETERS)
FRACTIONS: ± 1/64
DECIMALS: ±.02 ±.008
ANGLE: ±1/2°

PROPRIETARY NOTICE:
THE INFORMATION IN THIS DRAWING IS PROPRIETARY AND SHALL NOT BE USED OR DISCLOSED WITHOUT WRITTEN PERMISSION FROM MICROWAVE COMMUNICATIONS LABORATORIES INC. (MCLI)

THIRD ANGLE PROJECTION

SCALE: N/A

SHEET: N/A

DRAWING TITLE: HIGH POWER DUAL DIRECTIONAL COUPLER

PART NO. HDL-57-60

CAGE CODE: 0D2L5

SIZE: N/A REV: N/A

DO NOT SCALE THE DRAWING

DWG NO. 85202