REVISIONS				
ZONE	REV	DESCRIPTION	Date	APPROVED

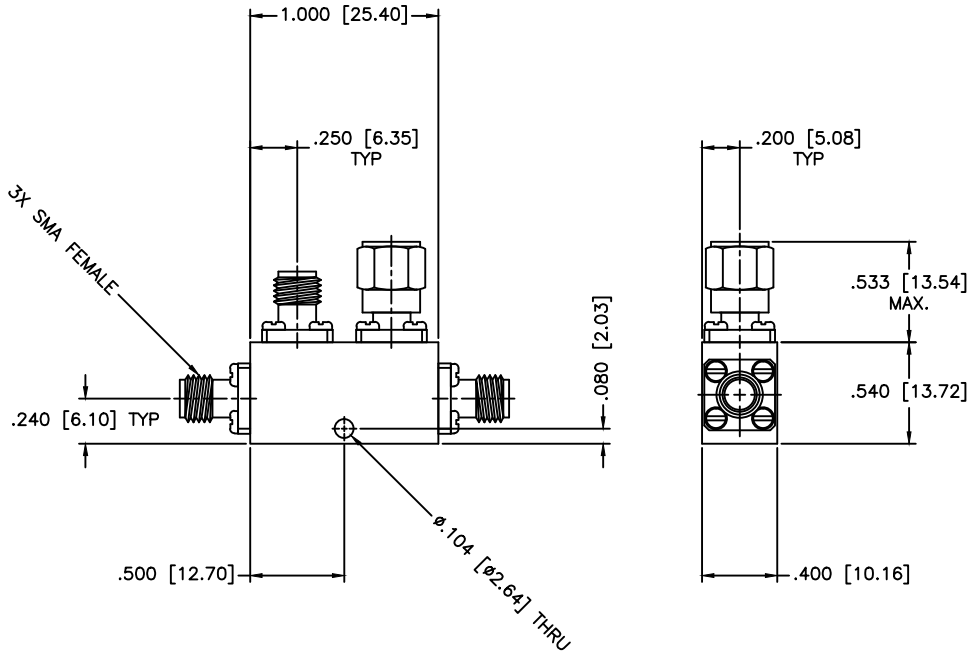

SPECIFICATIONS

Frequency Range:	7.5–18.2 GHz
Coupling:	20±1.0dB
Frequency Sensitivity:	±0.75dB
Insertion Loss:	0.5dB Max.
Directivity:	15dB Min.
VSWR:	1.40:1 Max.
Power:	50W, 2kW Peak

MATERIAL:

MCLI

MICROWAVE COMMUNICATIONS LABORATORIES INC.
7255 30TH AVE. N. SAINT PETERSBURG, FL 33710
TEL: (727) 344-6254 FAX: (727) 381-6116
hhtp://WWW.MCLI.COM

SCALE: N/A
SHEET: N/A

UNLESS OTHERWISE SPECIFIED:
TOLERANCES
IN (INCHES) OR [mm] (MILLIMETERS)
FRACTIONS: ± 1/64
DECIMALS: ±.01 ±.005
ANGLE: ±1/2°

DRAWING TITLE: DIRECTIONAL COUPLER

PART NO. CB17-20

DRAWN: Paiboon Luekhamhan — DATE: 11-12-1998

APPROVED: T. Nguyen — DATE: 11-12-1998

PROPRIETARY NOTICE:
THE INFORMATION IN THIS DRAWING IS PROPRIETARY AND SHALL NOT BE USED OR DISCLOSED WITHOUT WRITTEN PERMISSION FROM MICROWAVE COMMUNICATIONS LABORATORIES INC. (MCLI)

THIRD ANGLE PROJECTION

CAGE CODE: 0D2L5 | SIZE: A | REV: N/A | DWG NO. 82612

DO NOT SCALE THE DRAWING