REVISIONS				
ZONE	REV	DESCRIPTION	DATE	APPROVED

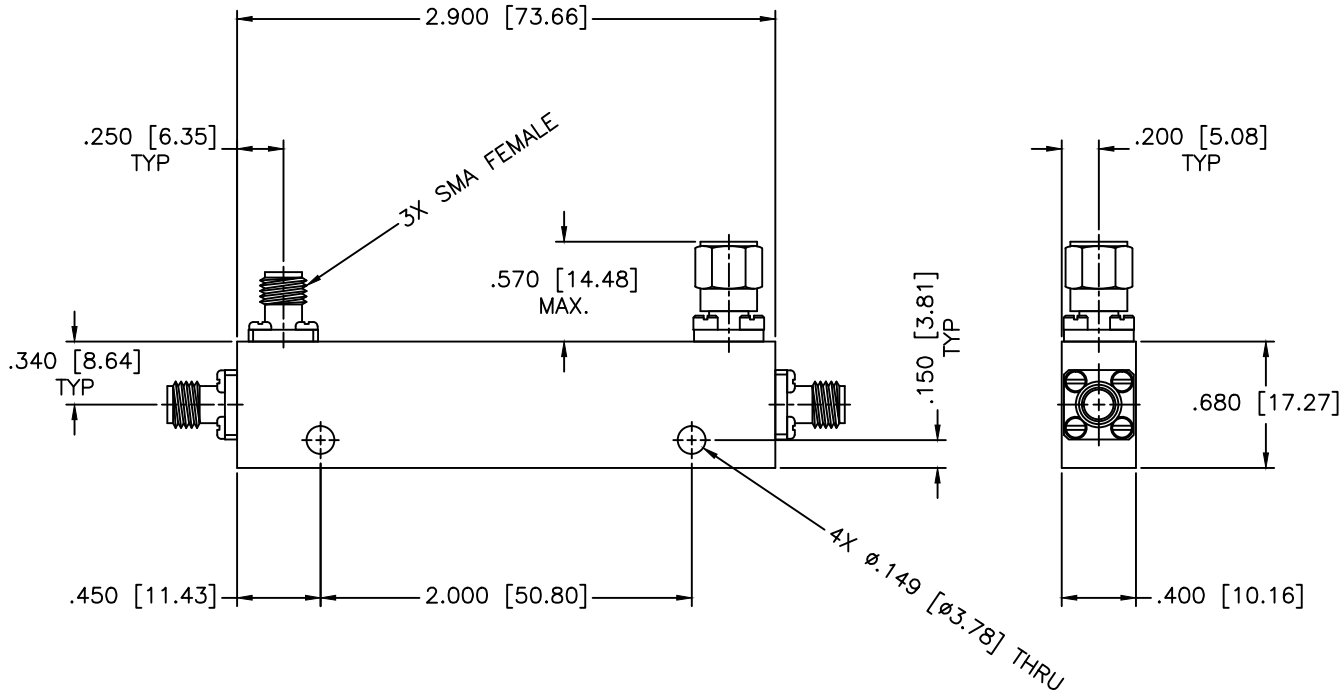

SPECIFICATIONS

Frequency Range:	0.8–2.3 GHz
VSWR:	1.25:1 Max.
Coupling:	10±1.25dB
Insertion Loss:	1.0dB Max.
Directivity:	20dB Min.
Frequency Sensitivity:	±0.5dB
Power Incident, Reflected:	50W, 5W, 1kW Peak

MATERIAL:

MCLI

MICROWAVE COMMUNICATIONS LABORATORIES INC.
7255 30TH AVE. N. SAINT PETERSBURG, FL 33710
TEL: (727) 344–6254 FAX: (727) 381–6116
hhtp://WWW.MCLI.COM

SCALE: N/A
SHEET: N/A

UNLESS OTHERWISE SPECIFIED:
TOLERANCES
IN (INCHES) OR [mm] (MILLIMETERS)
FRACTIONS: ± 1/64
DECIMALS: ±.01 ±.005
ANGLE: ±1/2°

DRAWING TITLE: DIRECTIONAL COUPLER

PART NO. C37–10

DRAWN: Paiboon Luekhamhan DATE: 10–01–1999

APPROVED: T. Nguyen DATE: 10–01–1999

PROPRIETARY NOTICE:
THE INFORMATION IN THIS DRAWING IS PROPRIETARY AND SHALL NOT BE USED OR DISCLOSED WITHOUT WRITTEN PERMISSION FROM MICROWAVE COMMUNICATIONS LABORATORIES INC. (MCLI)

THIRD ANGLE PROJECTION

CAGE CODE: 0D2L5

SIZE: A REV: N/A

DO NOT SCALE THE DRAWING

DWG NO. 81417