REVISIONS				
ZONE	REV	DESCRIPTION	Date	APPROVED

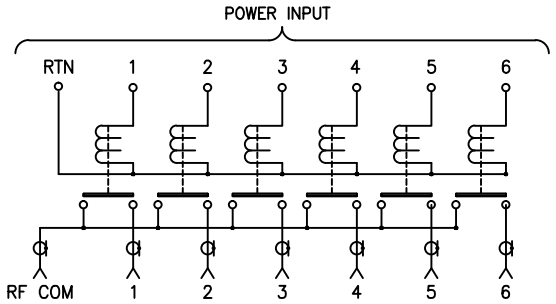

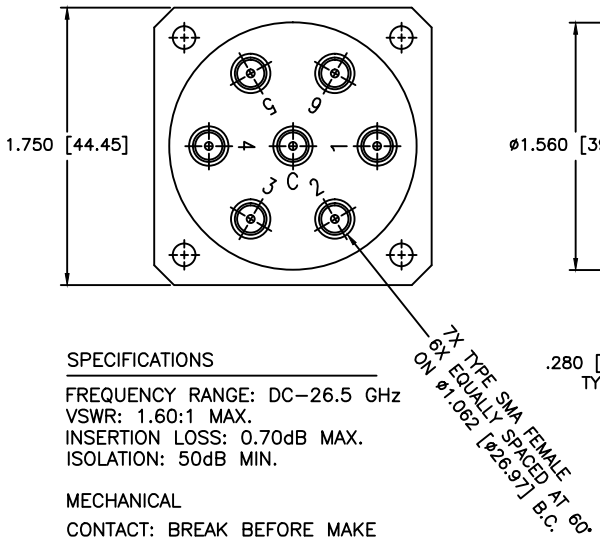

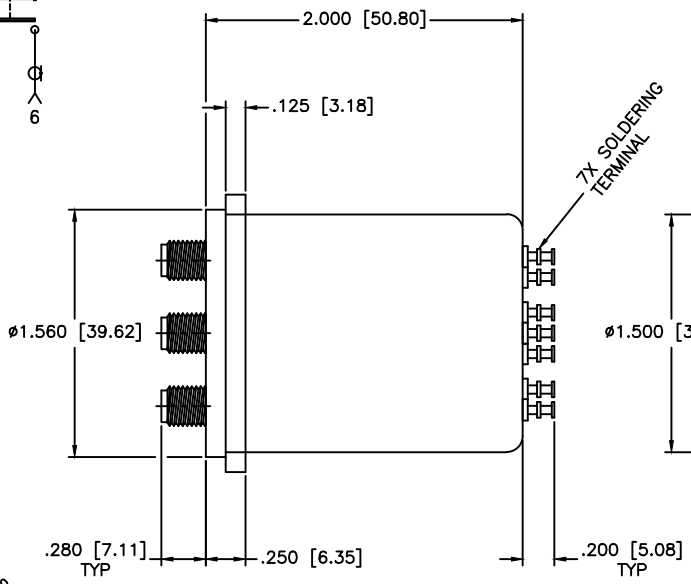

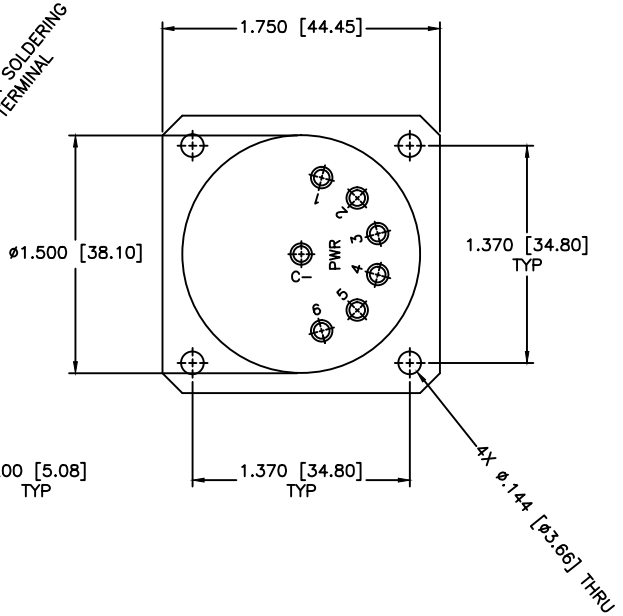

SPECIFICATIONS

FREQUENCY RANGE: DC–26.5 GHz
VSWR: 1.60:1 MAX.
INSERTION LOSS: 0.70dB MAX.
ISOLATION: 50dB MIN.

MECHANICAL

CONTACT: BREAK BEFORE MAKE
ACTUATOR: MOMENTARY
SWITCHING SPEED: 20 mSEC MAX

ELECTRICAL

ACTUATOR VOLTAGE: 28.0 Vdc (22.0–32.0 Vdc)
ACTUATOR CURRENT: 150mA MAX @ 28.0 Vdc
POWER HANDLING: 200W CW @ 1.0GHz
IMPEDANCE: 50 Ohms

ENVIRONMENTAL

OPERATING TEMP: –54°C to +90°C
SINE VIBRATION: 30 G'S rms
LIFE: 1,000,000 CYCLES
RANDOM VIBRATION: 20 G'S rms

MATERIAL:

MCLI

MICROWAVE COMMUNICATIONS LABORATORIES INC.
7255 30TH AVE. N. SAINT PETERSBURG, FL 33710
TEL: (727) 344–6254 FAX: (727) 381–6116
hhtp://WWW.MCLI.COM

SCALE: N/A
SHEET: N/A

UNLESS OTHERWISE SPECIFIED:
TOLERANCES
IN (INCHES) OR [mm] (MILLIMETERS)
FRACTIONS: ± 1/64
DECIMALS: ±.02 ±.009
ANGLE: ±1/2°

DRAWING TITLE: ELECTROMECHANICAL SWITCHES

PART NO. A6–8–M

DRAWN: Paiboon Luekhamhan DATE: 12–12–2007

APPROVED: T. Nguyen DATE: 12–12–2007

PROPRIETARY NOTICE:
THE INFORMATION IN THIS DRAWING IS PROPRIETARY AND SHALL NOT BE USED OR DISCLOSED WITHOUT WRITTEN PERMISSION FROM MICROWAVE COMMUNICATIONS LABORATORIES INC. (MCLI)

THIRD ANGLE PROJECTION

CAGE CODE: 0D2L5
SIZE: N/A
REV: N/A
DWG NO. 83020
DO NOT SCALE THE DRAWING