REVISIONS				
ZONE	REV	DESCRIPTION	Date	APPROVED

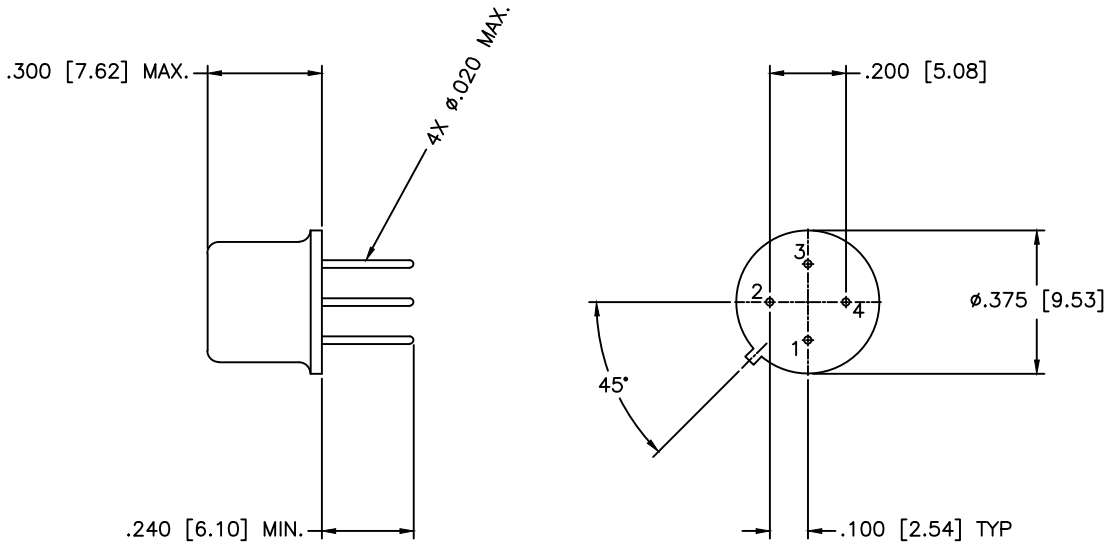

PIN–OUT TABLE

INPUT	OUTPUT	GROUND
3	2,4	1,5

SPECIFICATIONS

Frequency Range:	1–100 MHz
Isolation:	30dB Min.
Insertion loss:	0.50dB Max.
Phase Balance:	±1dB Max.
Amplitude Balance:	±0.1dB Max.
Power Rating:	1 Watt Max.

MATERIAL:

DRAWN: Paiboon Luekhamhan DATE: 08–22–2008

APPROVED: T. Nguyen DATE: 08–22–2008

MCLI

MICROWAVE COMMUNICATIONS LABORATORIES INC.
7255 30TH AVE. N. SAINT PETERSBURG, FL 33710
TEL: (727) 344–6254 FAX: (727) 381–6116
hhtp://WWW.MCLI.COM

SCALE: N/A

SHEET: N/A

UNLESS OTHERWISE SPECIFIED:
TOLERANCES
IN (INCHES) OR [mm] (MILLIMETERS)
FRACTIONS: ± 1/64
DECIMALS: ±.01 ±.005
ANGLE: ±1/2°

PROPRIETARY NOTICE:
THE INFORMATION IN THIS DRAWING IS PROPRIETARY AND SHALL NOT BE USED OR DISCLOSED WITHOUT WRITTEN PERMISSION FROM MICROWAVE COMMUNICATIONS LABORATORIES INC. (MCLI)

THIRD ANGLE PROJECTION

DRAWING TITLE: 2–WAY POWER DIVIDER

PART NO. PL2–2TS

CAGE CODE: 0D2L5

SIZE: N/A REV: N/A

DO NOT SCALE THE DRAWING

DWG NO. 84031